MIXX WINDOWS

NC-S 120 STH SLIM

Window And Facade Solutions In

Aluminium | Alu Wood | Wood | Wood Aluminium | Bronze

METRA SpA
Italy

MIXX WINDOWS

NC-S 120 STH SLIM

Sliding windows and doors

MIXX WINDOWS

www.metrawindows.it

METRA

Italian Style Emotions

METRA. THE ONLY COMPANY TO OFFER A COMPLETE RANGE OF PRODUCTS

OUR SERVICE

ALWAYS CLOSER TO CUSTOMERS

METRA's toll free number is always available in order to support your ideas, suggesting new solutions and finally directing you to Metra's point of sale. Metra's pre and after sale service will always help you in each phase: from your frame choice to installation, from cleaning advice to traceability of your frame history.

DESIGN AND STYLE

METRA's window and door frames include a wide range of aesthetic styles, adding thus value to the traditional and contemporary dwelling spaces, preserving in this manner the original features of buildings restored conservatively. The latest creations provide more luminosity to living spaces thanks to the tapered shapes and the reduced thickness of profiles.

DESIGN COMPLEMENTS

METRA's design complements are offered in a wide range of coordinated shapes distinguished by the original style capable of satisfying and harmonising the aesthetic requirements of any kind of dwelling environment.

Metra's accessories guarantee enhanced performances to one's own window and door frames.

FINISHING

A huge variety of finishing, resistant and chromatically surprising! From metallic colours to sand effects, opaque, glossy.....up to natural wood surface cladding the heart of aluminium.

THE CHOICE OF ALUMINIUM

Aluminium is becoming ever more present in our lives: from simple cans to high-speed trains.
Aesthetically agreeable, malleable, extremely resistant and 100% recyclable.
Aluminium is the ideal material for the creation of windows and doors.

GREEN

METRA is engaged in a low environmental impact production and all its products are Eco-friendly to the maximum extent.

METRA's POINT OF SALE

METRA's point of sale is the place where people enter with a dream and make it come true.

Sliding windows and doors

NC-S 120 STH Slim

Choosing and offering METRA sliding system NC-S 120 STH Slim line means to adopt a lifestyle increasingly contemporary and comfortable.
The slim line contains all the technology and design necessary to enhance interior and exterior Solutions: large windows, refined and ultra-thin designs, aesthetics performance, safety, air-tightness, durability and comfort.

Advantages

- Easy maintenance
- Maximum thermic and acoustic insulation
- No architectural barriers
- Space optimization
- Super thin high level design
- Inalterability and long-lasting
- Suitable for anti-theft systems
- Suitable for household automation and domotics
- Extremely smooth sliding action

Technical features

Frame dimensions: 120 - 140 mm
Air-water-wind tightness: brush gasket
Glass thickness: 26 - 42 mm
Maximum sash weight: 400 kg

Section

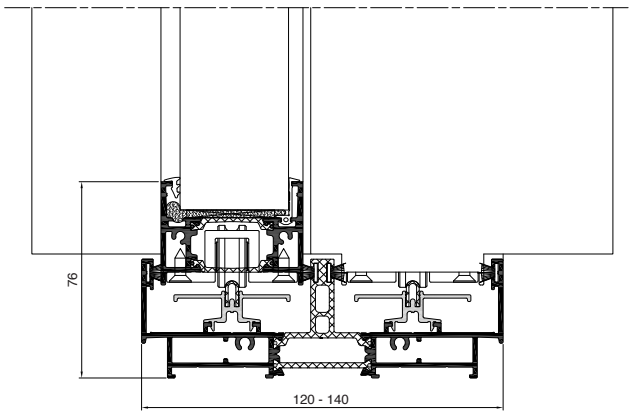

Applications

- Sliding French windows with 2 or 3 tracks
- Big dimension sliding French windows
- Possibility of angular opening without a fixed jamb

Opening typologies

1 sash + fixed | 2 sashes | 3 sashes on 3 tracks | 2 sashes + 2 fixed | 4 sashes on 2 tracks

Finishing

The most gratifying and creative part of purchasing METRA windows and doors is definitely choosing the surface finish or coating. The surface finishing is made using natural pigments with zero environmental impact thus ensuring exceptional aesthetic results and durability such as mat, gloss and extra gloss anodised or sand-effect paint, fantastic to be seen and touched.

Design complements

Handles and hinges. The complements and accessories are suitable for all METRA systems.
Contemporary shapes with unique and exclusive styles are designed to enhance every latest detail in all types of living space, combining aesthetics and functionality.

Technology

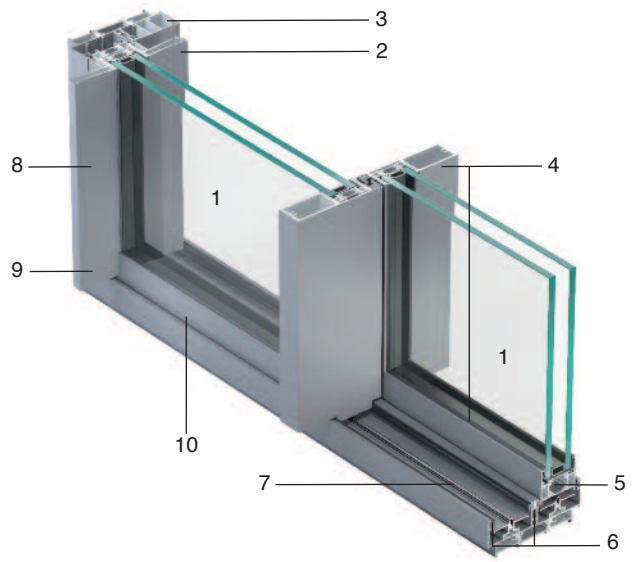

1 - Glazed sash: double glazing with an EPDM gasket (possibility of using high thickness shatter-proof glass)
2 - Finishing resistant to atmospheric agents
3 - Frame. It can be inserted and hidden inside the wall.
4 - Reduced size of the central junction and the profiles that remain visible (30 mm)
5 - Polyamide bars for thermic insulation
6 - Water-repellent brushes with triple tightness layers
7 - Stainless steel sliding tracks
8 - Multi-point locks
9 - Vertical reinforced profiles with built-in pull handle
10 - High performance multi-wheel sliding carriages (max. sash weight 400 kg)

METRA Quality

Metra's brand guarantees the products and accessories you are using assuring long lasting performances and durability.

Metra's systems have been certified by the most important test laboratories in Europe, obtaining the highest performance results.

Just to be sure, choose original profiles, easily recognizable through the brand M which can be found in the internal of the fastening and on each accessory.

Remember that accessories are integral parts of the system and only with METRA's original accessories you can obtain high performances.

Metra is, furthermore, among the first Italian companies to have obtained the trade mark on its own products thus to favour the recognisability and protect the consumer.

The quality of Metra's systems is furthermore guaranteed by the certified production processes "European trademark" and by the Company Quality System which has been certified by RINA according to ISO 9001:2008 norms.

NC-S 120 STH Slim

Certified performance

Water tightness EN 1027, EN 12208

The METRA window or door has not had any seepage of water even with a wind pressure equal to a speed ofof 96.59 Km/h (450 Pa)

Air pressure applied	(0Pa)	(50Pa)	(100Pa)	(150Pa)	(200Pa)	(250Pa)	(300Pa)	**(450Pa)**	(600Pa)	(900Pa)
Km/h	0	32,2	45,53	55,77	64,39	72	78,87	**96,59**	111,54	136,6
Class achieved	1A	2A	3A	4A	5A	6A	7A	**8A**	9A	E900

Capacity of the window or door to block seepage of water when it is struck by a water flow and there is a pressure difference between the internal and external side.

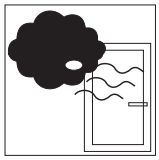

Air permeability EN 1026, EN 12207

The METRA window or door was subjected to a wind pressure equal to a speed of 111.54 Km/h (600 Pa) and passed the test with positive results.

sAir pressure applied	(150Pa)	(300Pa)	(600Pa)	**(600Pa)**
Km/h	55,77	78,87	111,54	**111,54**
Class achieved	1	2	3	**4**

Characteristic of a closed vent to let air pass through when the internal and external pressures are mutually different; the smaller the volume dispersed, the greater the window or door quality.

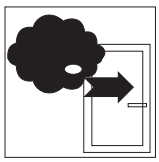

Resistance to wind load EN 12211, EN 12210

When the METRA window or door was subjected to a wind load equal to a speed of 157.74 Km/h (1000 Pa), neither breakages nor permanent deformation occurred.

Air pressure applied	(400Pa)	(800Pa)	**(1200Pa)**	(1600Pa)	(2000Pa)	(>2000Pa)
With deflection	A (≤ 1/150)		**B (≤1/200)**		C (≤1/300)	
Class achieved	1	2	**3**	4	5	Exxx

Capacity of a window or door subjected to high pressure and/or suction, such as those caused by wind, to remain within admissible deformation limits and to conserve its initial properties so as to ensure protection and safety to the users.

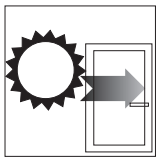

Thermal transmittance

The METRA window and door comply with the energy saving standards.

Uf W/m² K — 3.7

Uw W/m² K* — 1.6

* 2 leaf door 2500 x 2500 mm; glass: Ug=0.8 W/m2K, psi=0.05 W/mK

The heat transmission rate U is the heat flow which goes through the window or door according to m² of surface and for each degree of difference in temperature between exterior and interior. The unit of thermic transmission measurement is W/m²K.

Aluminium-Wood

For those who love natural wood applied to contemporary forms, aluminium-wood is the perfect choice. Great resistance, security and airtightness with an aluminium core... as well as the stunningly stylish shades and look of various types of wood.

For graphic reasons, the colours shown in this page are only indicative. Ask your Metra dealer the sample of the colour chosen.

Evolution

Natural oxidized effects, matt, gloss, and even extra-gloss, produce a cool and trendy effect. The evolution line was inspired by architects to enhance modern lifestyles.
Evolution is highly sought after for all types of living spaces because of its strong aesthetic and durability in any type of climate.

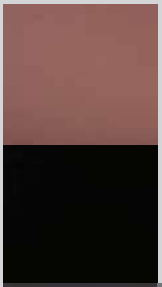

For graphic reasons, the colours shown in this page are only indicative. Ask your Metra dealer the sample of the colour chosen.

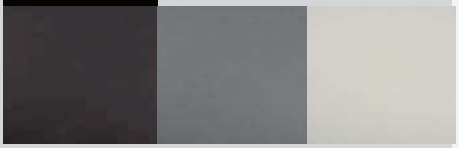

Sablé

The Sablé finishes have a multi-sensorial effect. They are fantastic to look at and rough or satin to the touch.
The sandblasted effect is quite versatile, trendy and easy to use in renovations and innovative living.

For graphic reasons, the colours shown in this page are only indicative. Ask your Metra dealer the sample of the colour chosen.

Natur-Plus

The Natur-Plus line combines the sturdiness and reliability of aluminium windows and doors with the colours of the wood. Two layers of powder reproduce the typical grain and hues of the various types of wood.

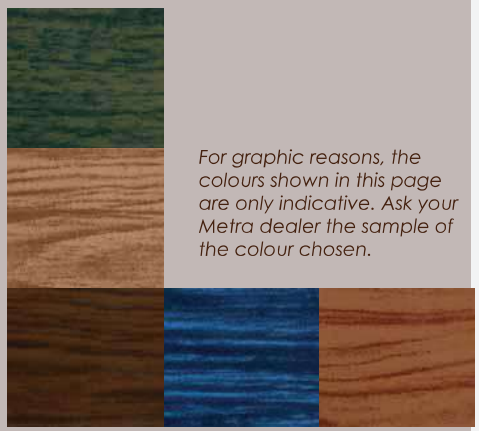

For graphic reasons, the colours shown in this page are only indicative. Ask your Metra dealer the sample of the colour chosen.

Raffaello

The Raffaello line was developed in collaboration with important design boards and offers two different finishes: smooth and hammered. Thanks to the specific use of the "pointillist" method - obtained by a controlled mix of several different shades of colour - both finishes have an original and exclusive feel and look.

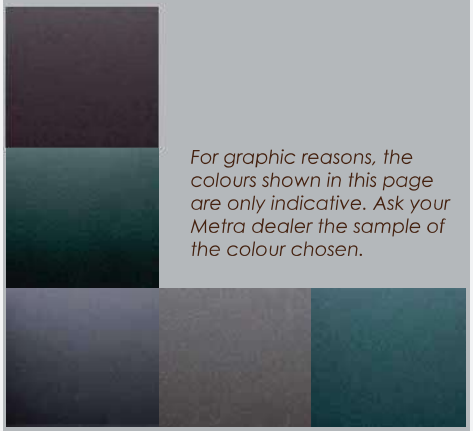

For graphic reasons, the colours shown in this page are only indicative. Ask your Metra dealer the sample of the colour chosen.

Decor

Decor combines the strength of aluminium with the aesthetics of wood.
This line faithfully reproduces the grain of traditional types of wood thanks to the sublimation process carried out on the painted layer.

For graphic reasons, the colours shown in this page are only indicative. Ask your Metra dealer the sample of the colour chosen.

MIXX WINDOWS

METRA SpA
Italy

Mixx Windows Display available at

Sapna Interiors Building
39 B IDC Main MG Road,
Gurgaon (Haryana)122001,
India

www.mixxwindows.com

For Further information please contact

Mr Abhinav Gaind
at +91 8130101999

Mr Karan Bhutani
at +91 9818392020.

Email : info@mixxwindows.com